Pasador Mod. 320

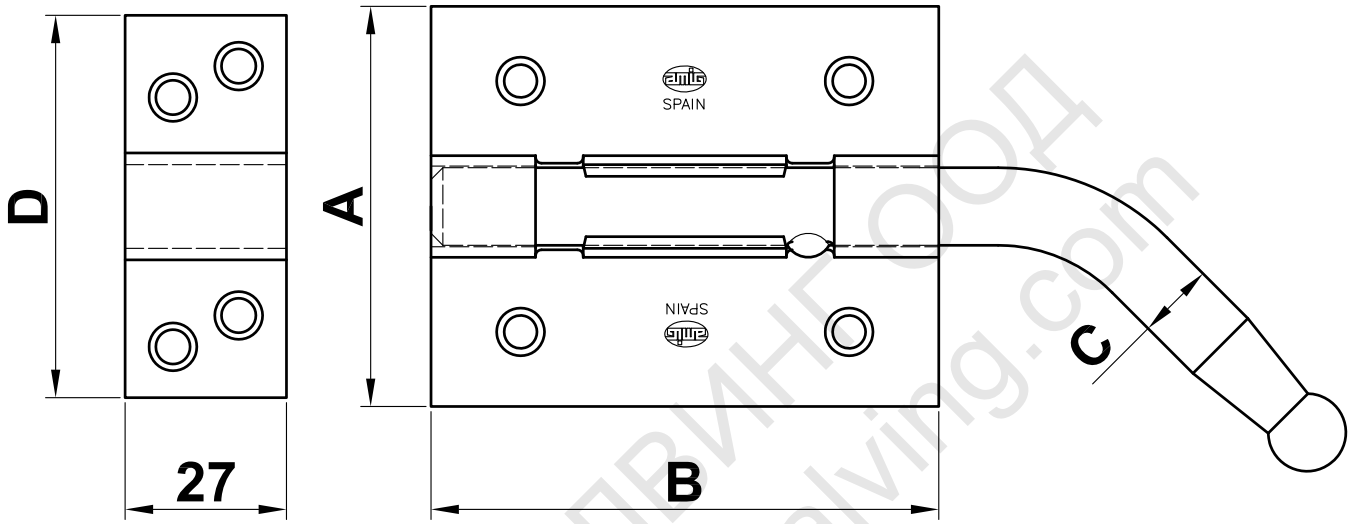

Medidas	200	250	300	400	500	600	800	1000	1200	1500
A (mm)	67	67	67	67	67	67	67	67	67	67
B (mm)	85	85	120	120	120	120	120	120	120	120
ØC (mm)	13	13	15	15	15	15	15	15	15	15
Agujeros base	4	4	6	6	6	6	6	6	6	6

ТАШЕВ-ГАЛВИНГ ООД
www.tashev-galving.com